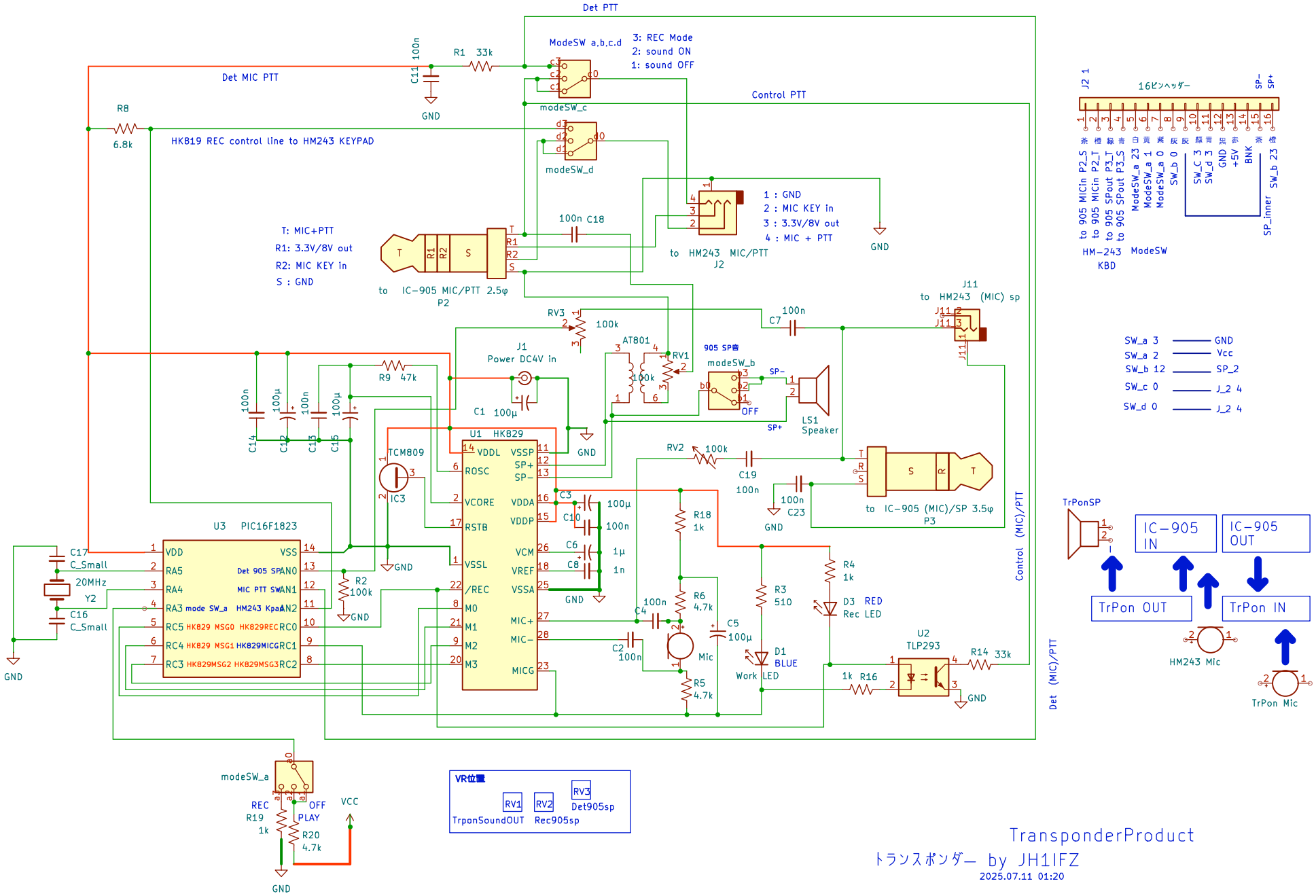
Det PTT
Det MIC PTT
Control PTT
HKB19 REC control line to HM243 KEYPAD
ModeSW a,b,c,d
3: REC Mode
2: sound ON
1: sound OFF
modeSW_c
modeSW_d
R1 33k
C11 100n
GND
R8
6.8k
100n C18
T: MIC+PTT
R1: 3.3V/8V out
R2: MIC KEY in
S : GND
to IC-905 MIC/PTT 2.5φ
P2
1 : GND
2 : MIC KEY in
3 : 3.3V/8V out
4 : MIC + PTT
to HM243 MIC/PTT
J2
J11
to HM243 (MIC) sp
C7 100n
RV3 100k
AT801
RV1 100k
905 SP音
modeSW_b
SP-
SP+
OFF
LS1
Speaker
J1
Power DC4V in
C1 100µ
R9 47k
C14 100n
C12 100µ
C13 100n
C15 100µ
TCM809
IC3
U1 HKB29
VDDL
ROSC
VCORE
RSTB
VSSL
/REC
M0
M1
M2
M3
VSSP
SP+
SP-
VDDA
VDDP
VCM
VREF
VSSA
MIC+
MIC-
MICG
C3 100µ
C10 100n
C6 1µ
C8 1n
RV2 100k
C19 100n
C23 100n
R18 1k
R6 4.7k
R5 4.7k
C4 100n
C2 100n
C5 100µ
Mic
R3 510
R4 1k
D3 RED
Rec LED
D1 BLUE
Work LED
U2
TLP293
R14 33k
R16 1k
to IC-905 (MIC)/SP 3.5φ
P3
Control (MIC)/PTT
U3 PIC16F1823
VDD
RA5
RA4
RA3 mode SW_a
RC5 HK829 MSG0 HK829REC
RC4 HK829 MSG1 HK829MICG
RC3 HK829MSG2 HK829MSG3
VSS
RA0 Det 905 SP
RA1 MIC PTT SW
RA2 HM243 Kpad
RC0
RC1
RC2
C17 C_Small
20MHz
Y2
C16 C_Small
R2 100k
modeSW_a
REC
OFF
PLAY
R19 1k
R20 4.7k
VCC
VR位置
RV1 TrponSoundOUT
RV2 Rec905sp
RV3 Det905sp
J2 1
16ピンヘッダー
SP- SP+
糸 橙 緑 青 白 黄 黒 灰 灰 緑 青 黄 赤 赤 糸 橙
to 905 MICin P2_S
to 905 MICin P2_T
to 905 SPout P3_T
to 905 SPout P3_S
ModeSW_a 23
ModeSW_a 1
ModeSW_a 0
SW_b 0
SW_C 3
SW_d 3
GND
+5V
BNK
SP_inner
SW_b 23
HM-243 KBD
ModeSW
SW_a 3 GND
SW_a 2 Vcc
SW_b 12 SP_2
SW_c 0 J_2 4
SW_d 0 J_2 4
TrPonSP
IC-905 IN
IC-905 OUT
TrPon OUT
TrPon IN
HM243 Mic
TrPon Mic
Det (MIC)/PTT
TransponderProduct
トランスポンダー by JH1IFZ
2025.07.11 01:20